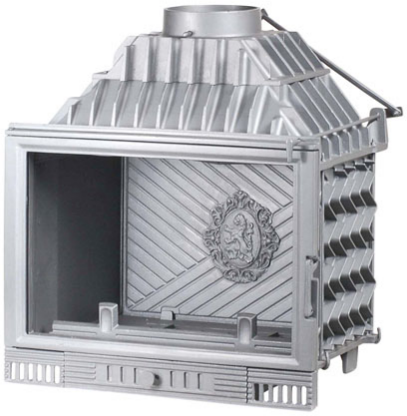

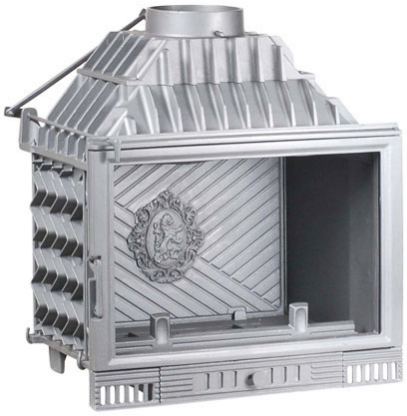

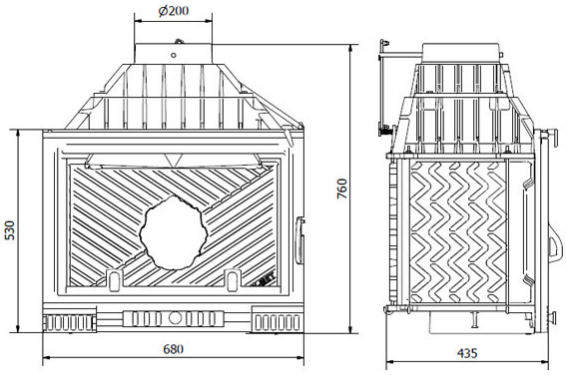

Fireplace Insert KAW-MET W1

Fireplace made from high quality cast iron with minimum wall thickness of 10 mm.

Densely spaced heatsinks thickness of 15-20 mm, increasing the surface and power of insert.

Built-in damper with lock, which allows to adjust the chimney draft and prevents volatilizing smoke into the room.

Deflector which extend the way of exhaust gases and incerease heating efficiency.

Removable back wall.

Door with mounted heat-resistant glass can withstand temperatures up to 800 C

Adjustable flow of air through the ash.

Warranty: 5 years.

Specifications	
TYPE:	W1
WEIGHT:	151 kg
POWER:	18 KW
EXTERNAL DIMENSIONS:: (WIDTH/HEIGHT/DEPTH)	680x530x435
GLASS DIMENSIONS:	590x380x4
HEATING CAPACITY:	
HEATING CAPACITY::	
DIAMETER OF GAS FLUE:	200 mm